NEIGHBORHOOD PARKS GRANT PROGRAM

Application Deadline:
9.30.2016

APPLICATION

Name & Organization:	Cherry Creek School District #5
Contact Information/Designated Individual To Serve As Point of Contact	Lisa Olson, Competitive Grants Manager 4700 S. Yosemite Street Greenwood Village, CO 80111 Email: lolson13@cherrycreekschools.org Phone: 720-886-7052
Responsible Party With Authority To Sign on Behalf of Application	Lisa Olson, Competitive Grants Manager 4700 S. Yosemite Street Greenwood Village, CO 80111 Email: lolson13@cherrycreekschools.org Phone: 720-886-7052

Documentation or Description of Funding Commitment
Currently, there are no other funding commitments for this specific project. The CCSD will absorb the costs of ongoing maintenance for all four schools as identified for this specific project.

Description of Partnership Contribution or Role
The Cherry Creek School District (CCSD) works closely in partnership with South Suburban Parks and Recreation. While they will not be contributing actual cash dollars to this project, they are considered collaborative partners in maintaining these specific schools as they are identified within the South Suburban Parks and Recreation district. CCSD has maintained a long-standing partnership with SSPRD and will continue to do so in management and sustainability of these schools grounds.

PROJECT DESCRIPTION

Project Site Location

- Dry Creek Elementary 7686 E. Hinsdale Ave., Centennial, 80112
- Heritage Elementary, 6867 E. Heritage Pl. S, Centennial, 80111
- Homestead Elementary, 7451 S. Homestead Pkwy., Centennial, 80112
- Walnut Hills Elementary, 8195 E. Costilla Blvd., Centennial, 80112

Photos Of Site(s)
Please see attached maps and school site photos.

Site Plan Or Illustration of Proposed Improvements
Please see attached illustrations/renderings of the proposed shade structures. ~~and picnic tables.~~

Description of Proposed Improvements
As active and vibrant community hubs, Dry Creek Elementary, Heritage Elementary, Homestead Elementary, and Walnut Hills Elementary are historic academic pillars of excellence that have all been in existence serving the Centennial community for well over three decades. Today, all four elementary schools collectively serve over 1,500 kindergarten through 5th grade students each day during the school year and are areas of family and community gatherings and a variety of recreational sport sites before and after school, on weekends, and during the summer. Additionally, all four schools are either directly connected to or in close proximity to neighborhood parks, biking and hiking trails, and the Willow Springs Open Space and Holly Open Space areas. Ensuring the school grounds, parks, and fields as well as all neighboring open space areas and trails provide safe opportunities for outside activities and exercise is directly aligned with the district's comprehensive health and wellness strategy to keep kids and their families physically and mentally healthy. The vision of Cherry Creek School District's Comprehensive Wellness Strategy is to be the healthiest community in the nation, together with our students, staff, and families. We intentionally embrace a comprehensive model of wellness to include physical, psychological, and environmental well-being. This strategy, along with collaboration with community organizations, reflects our commitment to educating the whole child based on the *Whole School, Whole Community, Whole Child* model.

While all four schools are in varying stages of needing upgraded playground equipment due to the age of the schools, there are currently no shade structures on the playgrounds, near fields, or ballparks. While we're so fortunate to live in the beautiful state of Colorado where the sun shines, on average, more than 245 days per year, the need for shade structures throughout these heavily used community spaces is necessary. The most obvious and one of the most important reasons is that shade provides protection from solar UV radiation. Due to the scheduling complexities of physical education classes, sporting events, and other outdoor activities, students are often exposed to solar UV radiation during the peak sun hours of the day—between 10:00 a.m. and 4:00 p.m. Providing shade in areas where students already participate in outdoor activities can afford passive protection from the sun's damaging rays.

The four covered 20 foot by 20 foot shade structures will also increase accessibility for teachers and staff to extend and conduct outdoor classrooms while the weather is nice throughout the year. There are many evidence-based and evidence-informed science, art, history, and health and wellness curriculums that CCSD elementary schools use specifically for outdoor learning.

In both children and adults of all ages, regular physical activity is linked to enhanced health and reduced risk for the development of many chronic diseases. Lifelong physical activity patterns are often developed in childhood and adolescence. By providing shade on existing outdoor play areas and shared community spaces, the shade structure could reduce the temperature in

those areas by as much as 10° to 20 °, increasing the period of time that students and others can engage in active outdoor play.

Project Schedule
The Cherry Creek School District will begin the implementation of the cement pads and shade structures as soon as the ground is warm enough, with an anticipated start date in the spring 2017 and completion of the installation of all 4 shade structures ~~and 8 picnic tables~~ no later than summer 2017.

Identify Professional Services and Contractors, Including Design, Engineering, and Construction (if available)
The Cherry Creek School District has received bids from Recreation Plus, Ltd., located in Golden, CO which would be used for the purchase and installation of all shade structures ~~and picnic tables~~.

FUNDING REQUEST

Total Project Cost	~~$115,200~~ $96,300.00
Grant Amount Requested from the City	~~$103,000~~ $87,333.00
Applicant's Financial Match	~~$12,200~~ $8,967.00

Non-cash contribution (labor, in-kind services, etc.)
As many schools within the Cherry Creek School District are directly connected to or in close proximity to areas of land, parks, trails, and space that are part of the South Suburban Parks & Recreation District, CCSD and SSPRD have had a long standing partnership in maintaining school and community grounds to the highest level. We will continue to work closely together in the ongoing maintenance, upkeep, and sustainability of the four identified schools and all other school grounds in the City of Centennial.

ADDITIONAL INFORMATION

Description of How the Project Benefits the Community and Meets Requirements and Priorities of the Program
Dry Creek Elementary, Heritage Elementary, Homestead Elementary, and Walnut Hills Elementary are four of the oldest schools in the Cherry Creek School District; all who have been in existence in the Centennial community for between 30 to 40 years, from the time when these neighborhoods were just being developed and built. All four schools continue to provide excellence in education and boast playgrounds, baseball fields and/or open fields for school and community use. All school sites are directly connected to or less than one mile in proximity from neighborhood parks, trails, and open space areas. This includes the Willow Springs Open Space, Holly Open Space, Little Dry Creek Trail, Willow Creek Trail, Cherry Park, Walnut Hills Park, Hunters Hill Park, and Heritage Park.

Currently, none of these sites offer permanent shade structures. With the implementation of the four, 400 hundred square foot shade structures and two picnic tables to go under them at each identified school site, the opportunity for both students and community members of all ages to enjoy the outdoor spaces and increase accessibility is of great public benefit in these heavily used and highly visible areas. The requested shade structures would enhance social interactions, increase capacity of learning using outdoor class curriculum, provide much needed shade from the hot Colorado sun and weather, and increase overall health, wellness, and fitness for students, families, and the overall community.

Evidence of Commitment to Long-Term Maintenance

In 1874 the first "Cherry Creek school house" opened its doors to what was then an isolated community on the rugged eastern plains of Arapahoe County. That lone school house would serve as the roots of what would formally become the Cherry Creek School District in 1950. Today, the Cherry Creek School district is the fourth largest district in the Metro area, spanning 108 square miles into the cities of Denver, Aurora, Englewood, Centennial, and Greenwood Village serving a diverse group of over 54,700 students with 42 elementary schools, 10 middle schools, 7 high schools, 1 magnet school, and 1 charter school. The mission of Cherry Creek School District is to *inspire every student to think, to learn, to achieve, and to care.* Maintaining commitment to a strong history of academic excellence also includes ensuring our physical school sites and surrounding areas meet this overarching mission as safe and maintained areas for students, families, and CCSD communities.

Evidence of Property Ownership/Legal access

The Cherry Creek School District owns all property in which schools sites are directly located.

APPLICANT SIGNATURE: _____ **DATE:** 9/30/16

Cherry Creek Schools City of Centennial Neighborhood Grant Request 2016

City of Centennial Neighborhood Grant Schools

1. Homestead Elementary School
2. Dry Creek Elementary School
3. Heritage Elementary School
4. Walnut Hills Elementary School

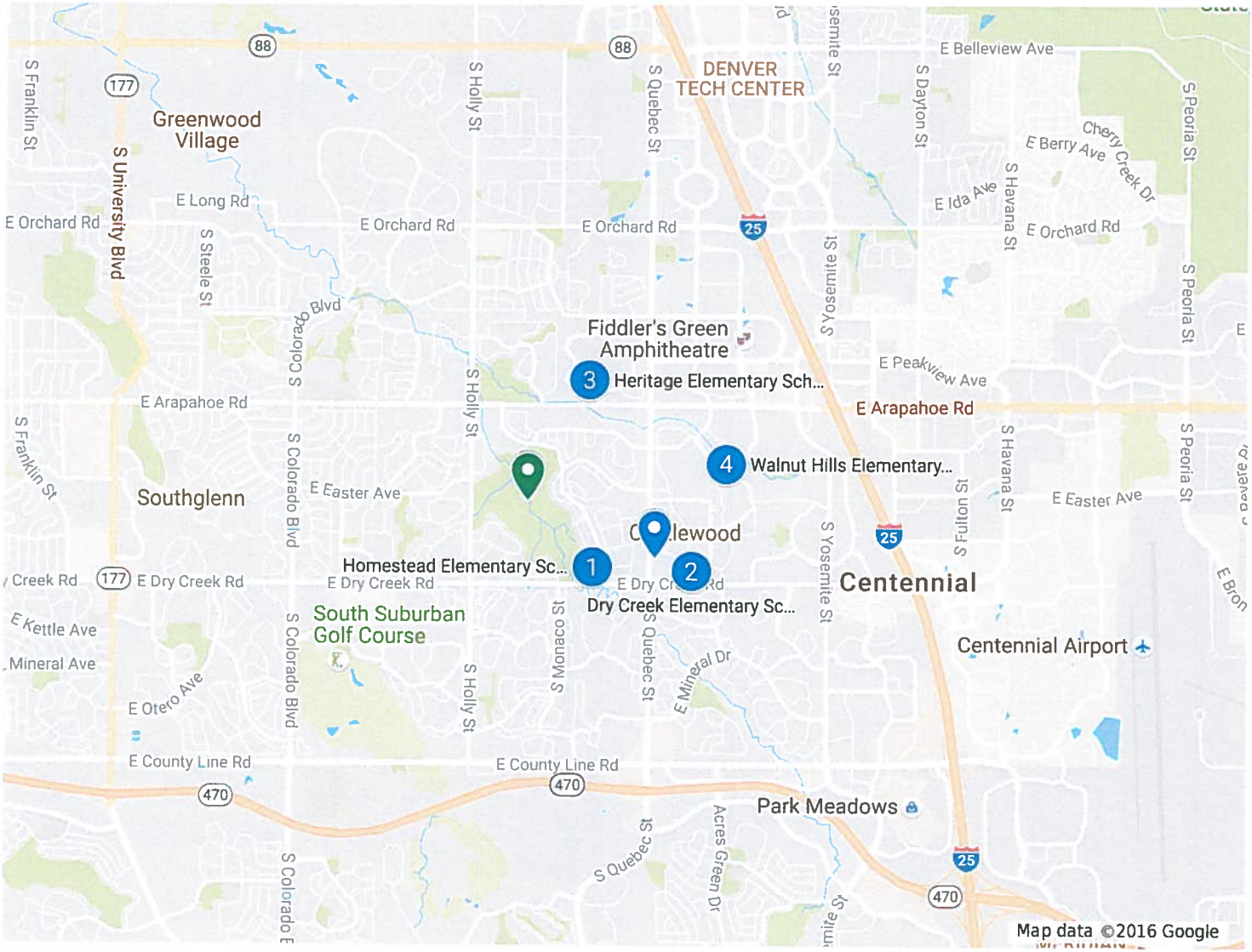

Dry Creek Elementary

Heritage Elementary

Homestead Elementary

S NIAGARA CIR
S LEODES PL
Ballfield 2
Ballfield 1
Homestead Elementary School
Parking
Multipurpose Field
S HOMESTEAD PKWY
E DRY CREEK RD
Please note: The Cherry Creek School District has exclusive rights to schedule all usage of this site during school hours. The athletic fields at this site are only available for general public use when school is not in session.
ssprd.org
HOMESTEAD ELEMENTARY SCHOOL/PARK - 7451 S HOMESTEAD PKWY, CENTENNIAL, CO 80112
South Suburban

Walnut Hills Elementary

Little Dry Creek Trail
Multipurpose Field 4
Ballfield 2
Multipurpose Field 3
Ballfield 1
Tennis
E COSTILLA BLVD
Parking
Walnut Hills Elementary School
E DAVIES AVE
S TAMARAC ST
Please note: The Cherry Creek School District has exclusive rights to schedule all usage of this site during school hours. The athletic fields at this site are only available for general public use when school is not in session.
ssprd.org
WALNUT HILLS ELEMENTARY SCHOOL/PARK - 8195 E. COSTILLA BLVD., CENTENNIAL, CO 80112
South Suburban

RECREATION PLUS, LTD.

Proposal/Order Form

ICON Shelter Systems Inc

c/o Recreation Plus, Ltd.
15209 West Ellsworth Drive, Golden, CO 80401
Telephone: (303) 278-1455 / (888) 278-1455 Fax: (303) 278-1606

Submitted To:	**Dave Henderson**	**Date:**	**September 27, 2016**
	Cherry Creek Schools	**Job Name:**	**HOMESTEAD, HERITAGE, DRY CREEK, WALNUT HILLS**
		Job Location:	**ENGLEWOOD, CO 80112**
Phone:	**720-554-4455**	**Email:**	**Dhrnderson16@cherrycreekschools.org**

Item	Part #	Qty	Description	Unit Price	Total Price
1	SQ20M-P6	4	20' shelter w/multi rib roof, ecoat/powdercoat standard colors, 4:12 roof pitch	$ 9,881.00	$ 39,524.00

	Subtotal:	**$ 39,524.00**
(for all 4 shelters shipping together)	**Freight:**	**$ 4,185.00**
	Total:	**$ *43,709.00***
	Optional Installation:	**$ 14,800.00**
	Footings (4 per shelter):	**$ 10,400.00**
	Concrete pad (22'x22') for each shelter, 4" thick:	**$ 17,424.00**
	Stamped Colorado engineer drawings(all 4):	**$ 1,000.00**

Note Extra Cost (PER SHELTER):
Colorado Sealed Drawings, Colorado Engineered Calculations, and Colorado Engineered Footings: $ 250.00

Installation does NOT include: footings, concrete pad, or engineering of either. Cost of permits are not included.

PRICES:	ARE GOOD FOR THIRTY (30) DAYS.
TAXES:	NOT INCLUDED.
DELIVERY:	8 TO 12 WEEKS ARO, DEPOSIT AND APPROVAL DRAWINGS.
DEPOSIT:	50% DOWN WHEN PLACING ORDER.
TERMS:	BALANCE DUE BEFORE SHIPMENT. GOVERNMENT MUNICIPALITIES HAVE NET 30 TERMS.
INSTALLATION:	INSTALLATION IS OPTIONAL AND IS AN ADD-ON TO THE TOTAL PRICE.
ROCK AND UTILITIES CLAUSE	CUSTOMER AGREES TO RECREATION PLUS, LTD'S ROCK AND UTILITIES CLAUSE. IF YOU DO NOT HAVE A COPY OF OUR ROCK AND UTILITIES CLAUSE, PLEASE CALL OUR OFFICE AND WE WILL FAX OR MAIL IT TO YOU.

ACCEPTANCE OF PROPOSAL: The above prices specifications and conditions are satisfactory and are hereby accepted. Any alterations or deviations from the above will be executed only upon written orders and will become an extra charge over and above the estimate. Please be assured your order will receive our prompt attention.

Signature: _____
Title: _____
Date of Acceptance: _____

All Paperwork (PO's, Deposit Checks, Etc.) Should Be Made Out to Icon Shelter Systems Inc. and Sent to Recreation Plus, Ltd., 15209 W. Ellsworth Dr., Golden CO 80401

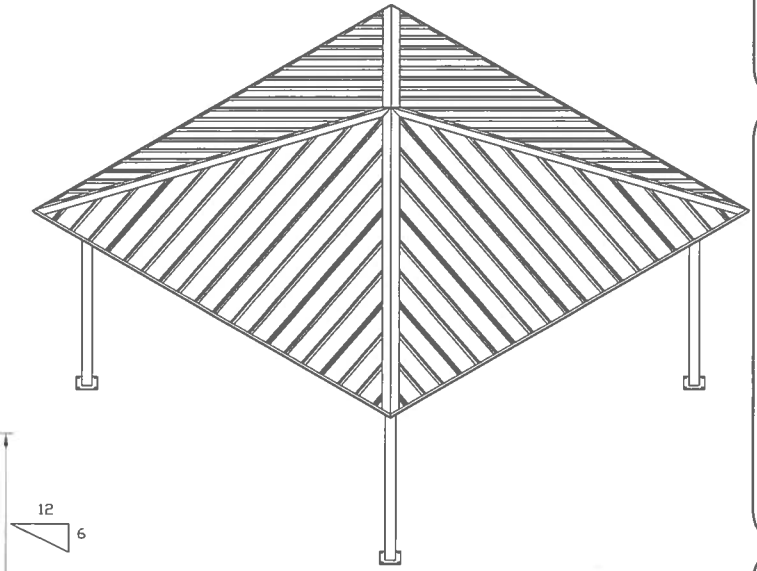

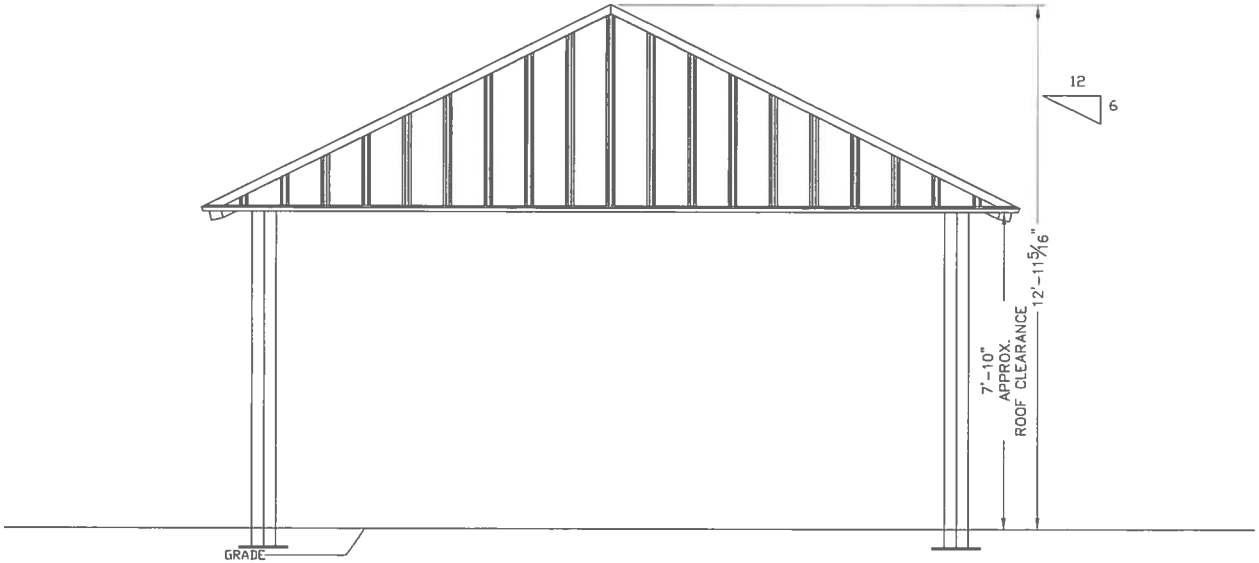

ICON
Shelter Systems Inc
DISTINCTIVE STEEL SHELTERS
WWW.ICONSHELTERS.COM
COPYRIGHT 2004, ICON SHELTER SYSTEMS, INC.
7900 LOGISTICS DR.
SUITE C
ZEELAND MI, 49464

616.748.0985
800.748.0985
616.748.0995 FX

Elevation

DRAWN BY:	ID
DATE:	2/10/2009
JOB NO.:	STANDARD
REVISION:	
BUILDING TYPE:	SQ20M-P6
PROJECT NAME:	34-150-150

SHEET 1

DWG:S:\Engineering\Standards\Shelters\SQ\20\M-P6-34-150-150\Drawings\Preliminary\SQ20M-P6-34-150-150-9237.DWG

PRELIMINARY: NOT FOR CONSTRUCTION

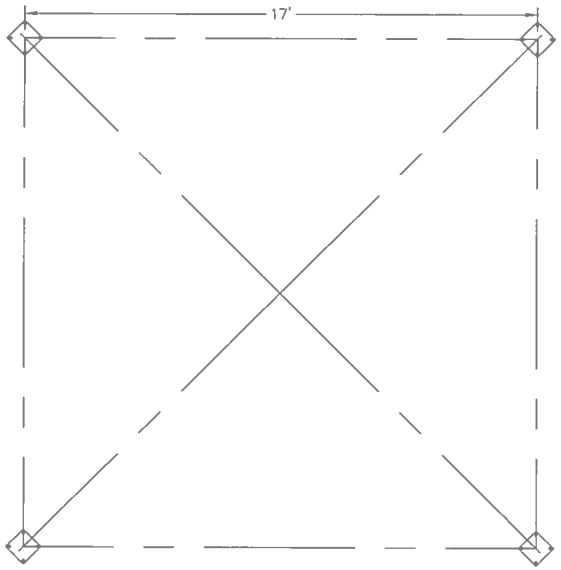

ANCHOR BOLT LAYOUT

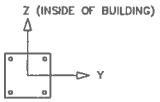

LOADS TO FOUNDATION (KIPS, IN-KIPS)

LOAD COMBINATION	FOUNDATION LOADS				
	AXIAL (Fx)	SHEAR (Fy)	SHEAR (Fz)	MOMENT (My)	MOMENT (Mz)
DL	0.76	0.00	0.00	0.00	0.00
SL	3.08	0.00	-0.01	-0.02	0.00
W-UPLIFT	-2.73	0.43	-0.42	3.86	3.83
W-FY	-2.59	-0.43	0.43	-3.82	-3.83
W-FZ	-2.59	0.43	0.43	-3.82	3.83
E-FY	-0.06	-0.44	-0.44	3.97	-3.96
E-Z	-0.06	-0.44	-0.44	3.97	-3.96

THESE FOUNDATION LOADS ARE FOR ESTIMATING PURPOSE ONLY.
THE ACTUAL LOADS WILL BE DETERMINED IN THE FINAL ENGINEERING

NOTES:
- TABLE SHOWS UNFACTORED SERVICE LOADS
- A FOUNDATION DESIGN HAS NOT BEEN PERFORMED BY ICON SHELTER SYSTEMS INC.
- A LICENSED ENGINEER FAMILIAR WITH SOIL CONDITIONS AT CONSTRUCTION SITE MUST PERFORM A FOUNDATION DESIGN.
- THE STRUCTURE HAS BEEN ENGINEERED AS AN OPEN STRUCTURE.
- CONSULT ICON SHELTER SYSTEMS INC. IF THE STRUCTURE IS TO BE ENCLOSED.
- COORDINATES ARE LOCAL TO THE COLUMN

DEFINITIONS:
DL = SERVICE LEVEL DEAD LOAD REACTION WITH THE GREATEST AXIAL LOAD
SL = SERVICE LEVEL SNOW LOAD REACTION WITH THE GREATEST AXIAL LOAD
W-UL = SERVICE LEVEL WIND LOAD REACTION WITH THE GREATEST UPLIFT LOAD
W-Y = SERVICE LEVEL WIND LOAD REACTION WITH THE GREATEST MAGNITUDE OF SHEAR IN THE LOCAL Y DIRECTION
W-Z = SERVICE LEVEL WIND LOAD REACTION WITH THE GREATEST SHEAR VALUE ACTING IN THE SAME DIRECTION AS THE DL SHEAR LOAD
E-Y = SERVICE LEVEL SEISMIC LOAD REACTION WITH THE GREATEST MAGNITUDE OF SHEAR IN THE LOCAL Y DIRECTION
E-Z = SERVICE LEVEL SEISMIC LOAD REACTION WITH THE GREATEST MAGNITUDE OF SHEAR IN THE LOCAL Z DIRECTION

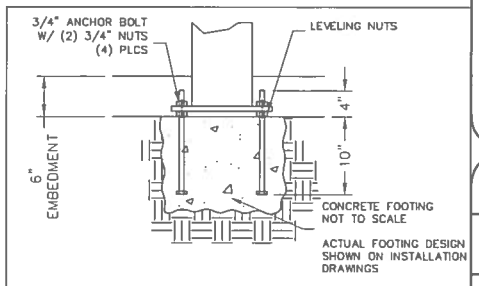

PRELIMINARY DRAWINGS SHOWN AS 6" BURIED

STANDARD BASE CONNECTION
COLUMN TYPE: A (6" BURIED)

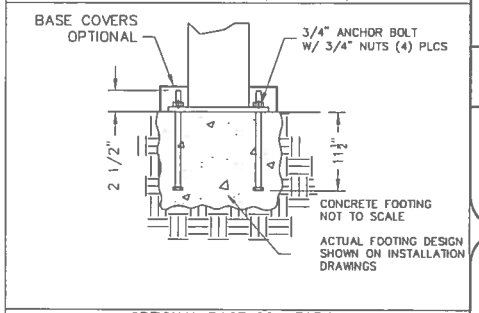

OPTIONAL BASE CONNECTION
COLUMN TYPE: B (SURFACE MOUNT W/ COVERS)

ICON Shelter Systems Inc
DISTINCTIVE STEEL SHELTERS
WWW.ICONSHELTERS.COM
COPYRIGHT 2004, ICON SHELTER SYSTEMS, INC.
7900 LOGISTICS DR.
SUITE C
ZEELAND MI, 49464
616.748.0985
800.748.0985
616.748.0995 FX

Anchor Bolt Layout

DRAWN BY:	ID
DATE:	2/10/2009
JOB NO.:	STANDARD
REVISION:	
BUILDING TYPE:	SQ20M-P6
PROJECT NAME:	34-150-150

SHEET 2.0

DWG:S:\Engineering\Standards\Shelters\SQ\20\M-P6-34-150-150\Drawings\Preliminary\SQ20M-P6-34-150-150-9237.DWG

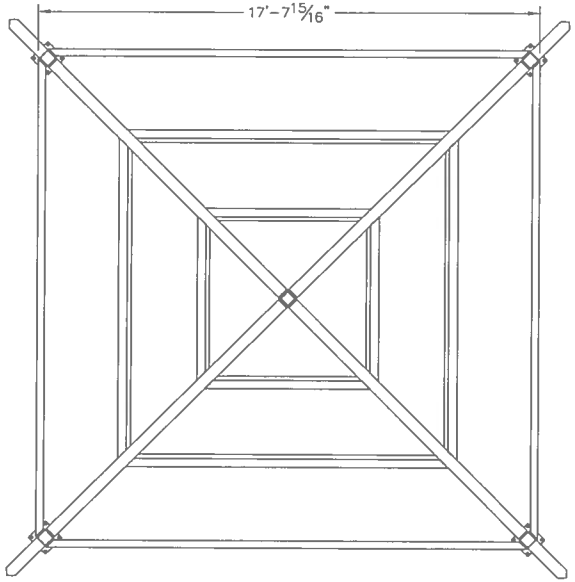

PLAN

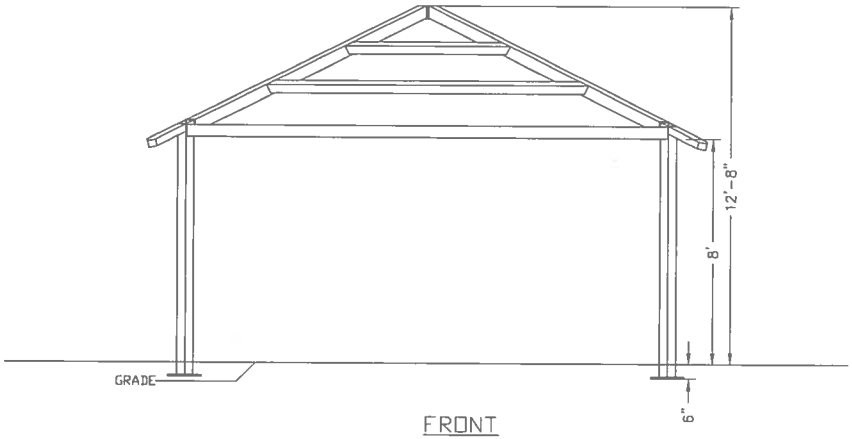

FRONT

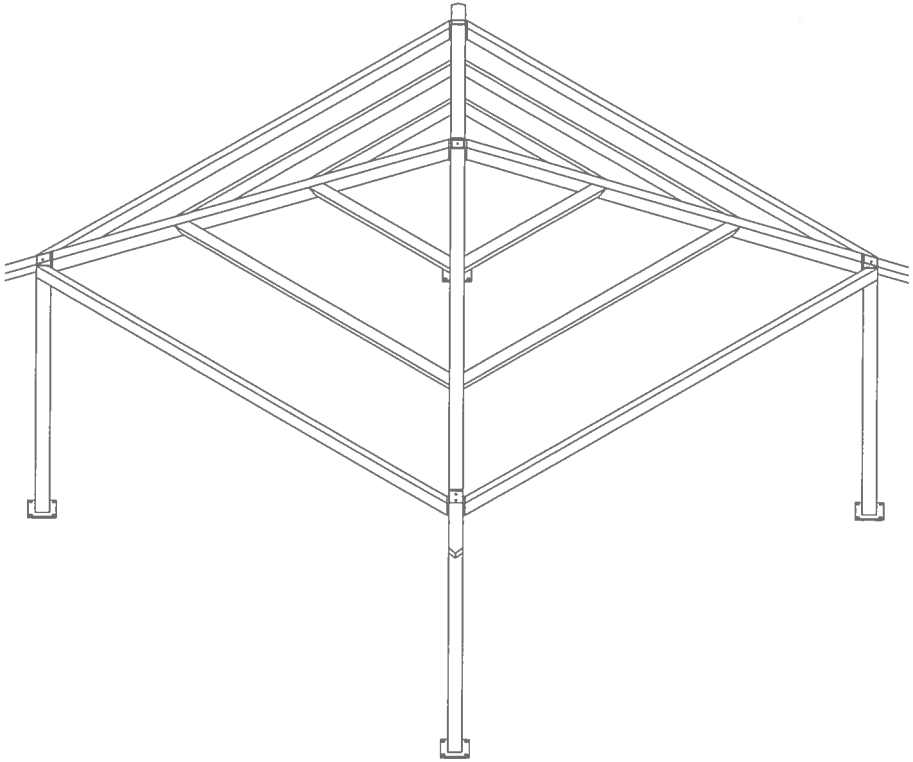

ISOMETRIC

ALL STRUCTURAL COMPONETS WILL BE:
TUBE: ASTM A500 GRADE B
PLATE: ASTM A36
BOLTS: ASTM A325
NUTS: ASTM A563
WELDING: GMAW

NOTE:
COLUMN SIZE: HSS5x5x0.1875

ICON
Shelter Systems Inc
DISTINCTIVE STEEL SHELTERS
WWW.ICONSHELTERS.COM
COPYRIGHT 2004, ICON SHELTER SYSTEMS, INC.
7900 LOGISTICS DR.
SUITE C
ZEELAND MI, 49464

616.748.0985
800.748.0985
616.748.0995 FX

Frame

DRAWN BY:	ID
DATE:	2/10/2009
JOB NO.:	STANDARD
REVISION:	
BUILDING TYPE:	SQ20M-P6
PROJECT NAME:	34-150-150

SHEET
3.0

DWG:S:\Engineering\Standards\Shelters\SQ\20M-P6-34-150-150\Drawings\Preliminary\SQ20M-P6-34-150-150~9237.DWG

FASTENERS

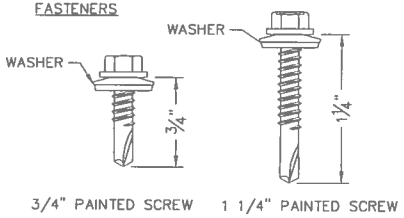

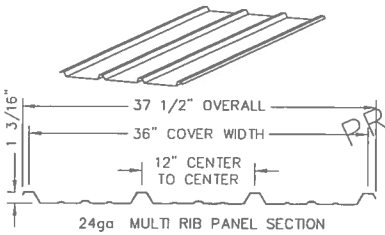

PRELIMINARY: NOT FOR CONSTRUCTION

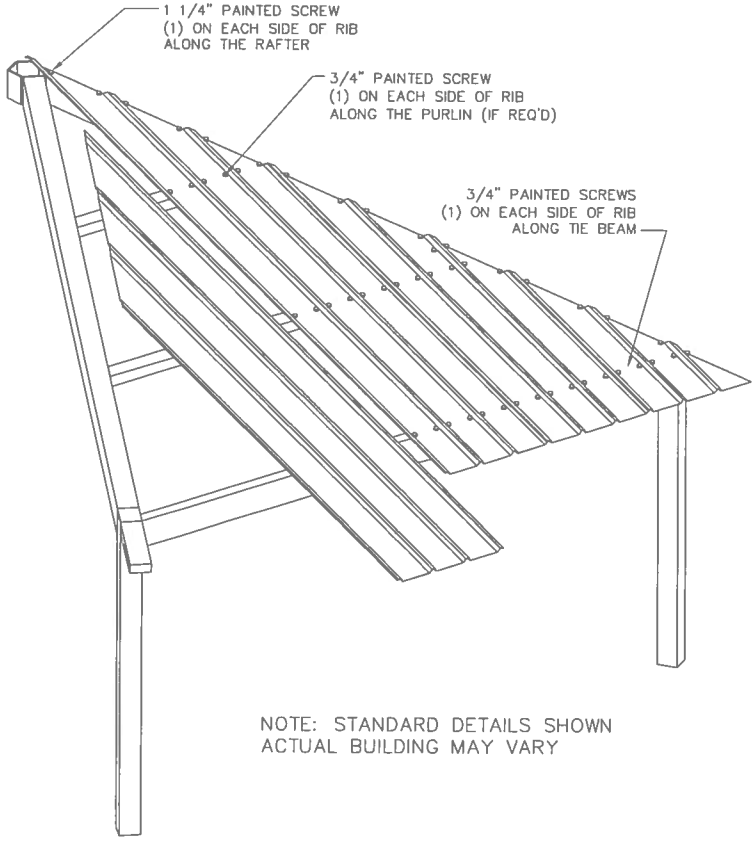

NOTE: STANDARD DETAILS SHOWN
ACTUAL BUILDING MAY VARY

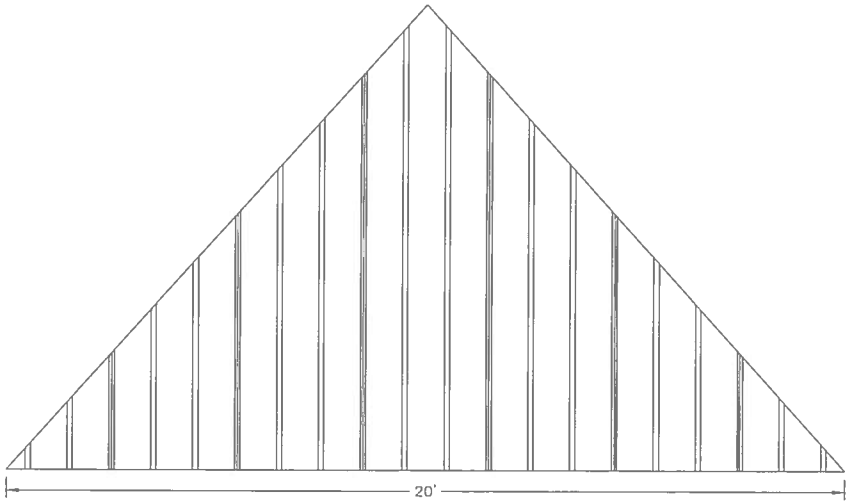

ROOF LAYOUT

ICON
Shelter Systems Inc
DISTINCTIVE STEEL SHELTERS
WWW.ICONSHELTERS.COM
COPYRIGHT 2004, ICON SHELTER SYSTEMS, INC
7900 LOGISTIC'S DR.
SUITE C
ZEELAND MI, 49464

616.748.0985
800.748.0985
616.748.0995 FX

ROOF LAYOUT

DRAWN BY:	ID
DATE:	2/10/2009
JOB NO.:	STANDARD
REVISION:	
BUILDING TYPE:	SQ20M-P6
PROJECT NAME:	34-150-150

SHEET
4.0

DWG:S:\Engineering\Standards\Shelters\SQ\20\M-P6-34-150-150\Drawings\Preliminary\SQ20M-P6-34-150-150~9237.DWG